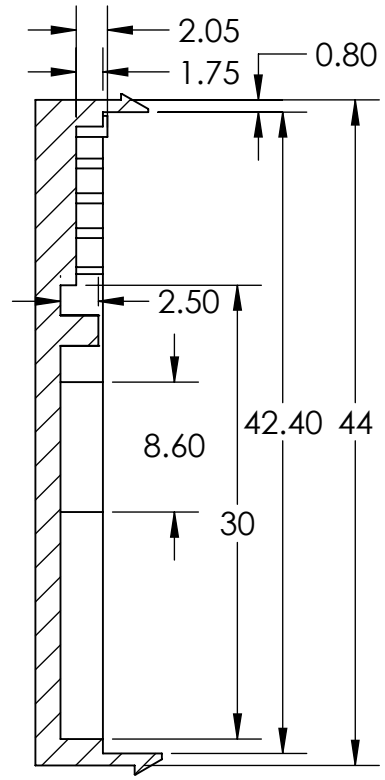

SECTION B-B

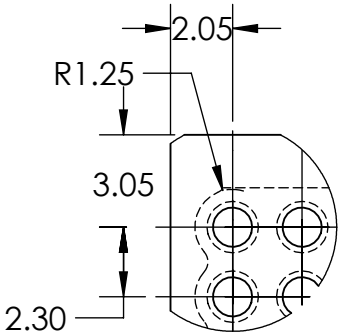

DETAIL B
SCALE 4 : 1

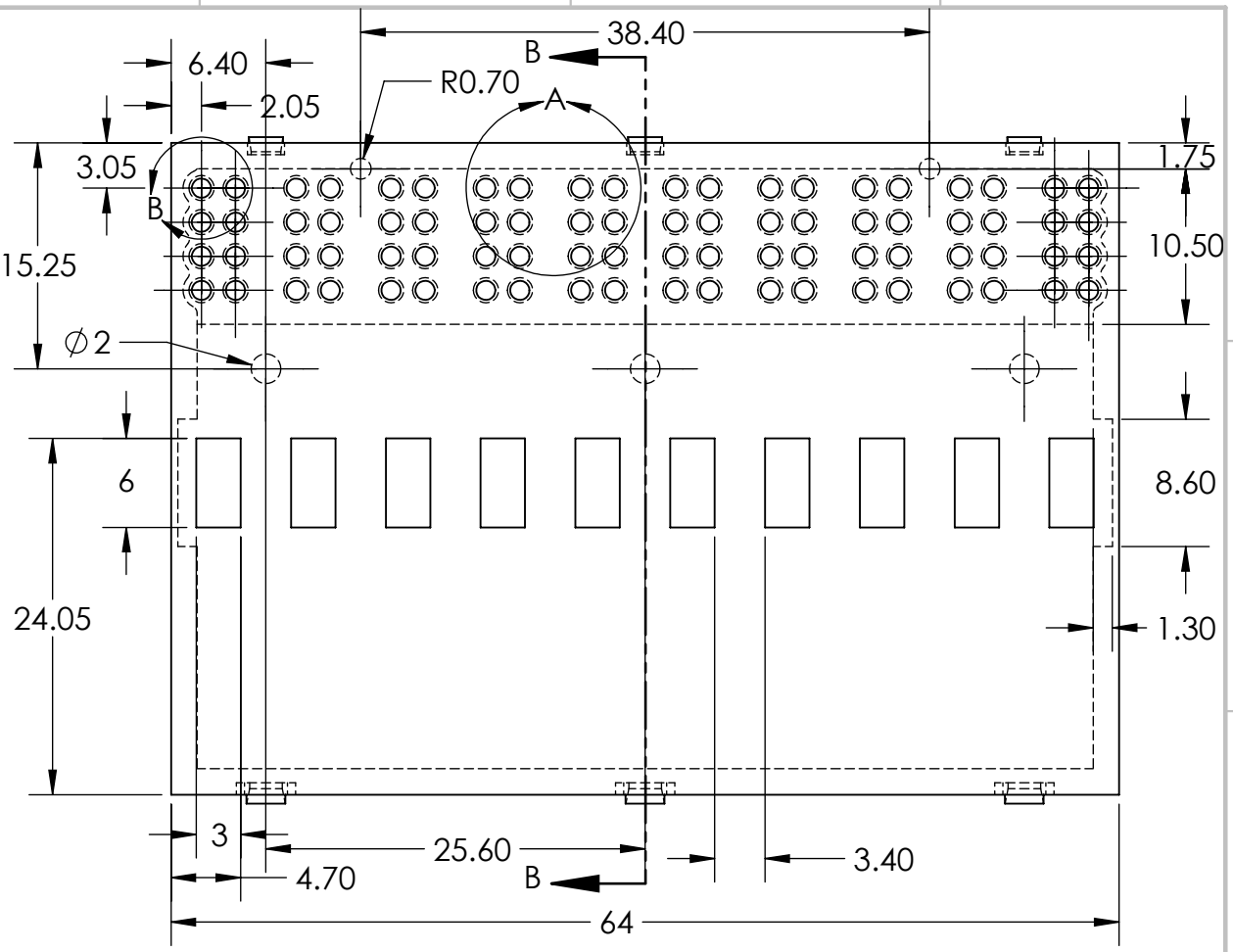

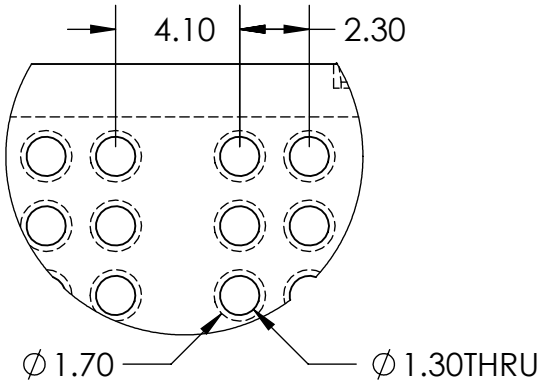

DETAIL A
SCALE 4 : 1

UNLESS OTHERWISE SPECIFIED: DIMENSIONS ARE IN MILLIMETERS SURFACE FINISH: TOLERANCES: LINEAR: ANGULAR:	FINISH:			DEBURR AND BREAK SHARP EDGES	DO NOT SCALE DRAWING	REVISION
					PCON TECHNOLOGY SYSTEMS	
	NAME	SIGNATURE	DATE		TITLE:	
DRAWN						
CHK'D						
APPV'D						
MFG						
Q.A				MATERIAL:	DWG NO. top_cover_1	A4
				WEIGHT:	SCALE:2:1	SHEET 1 OF 1